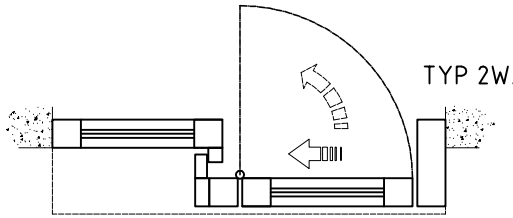

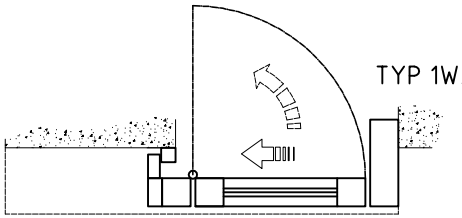

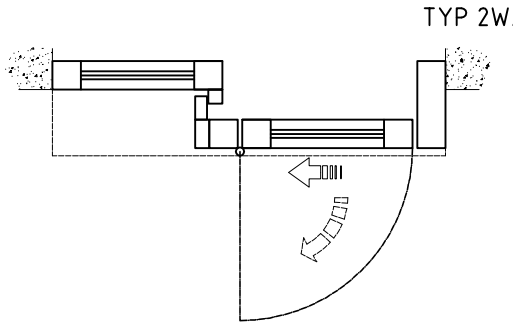

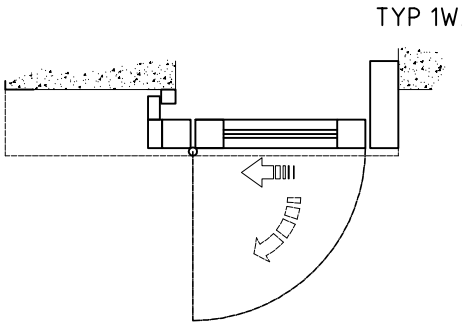

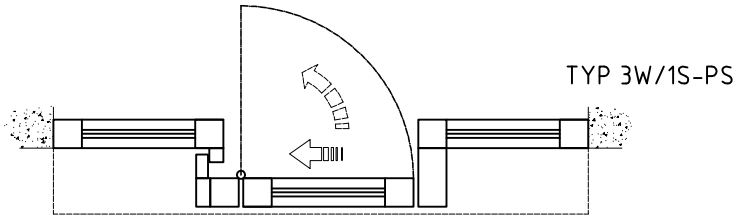

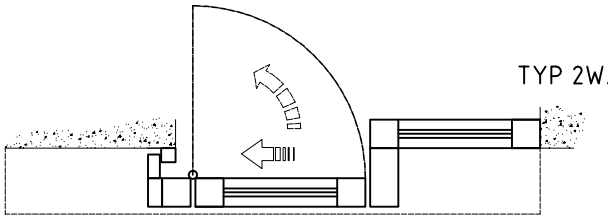

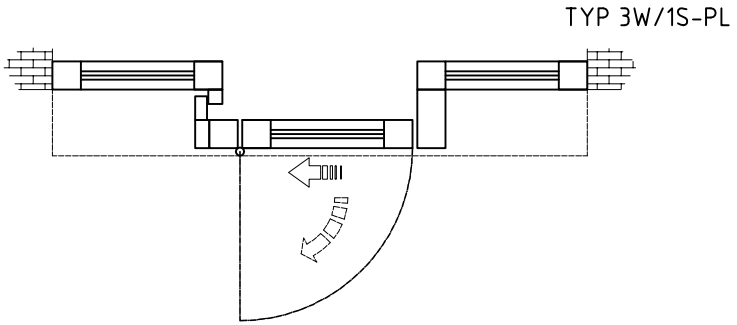

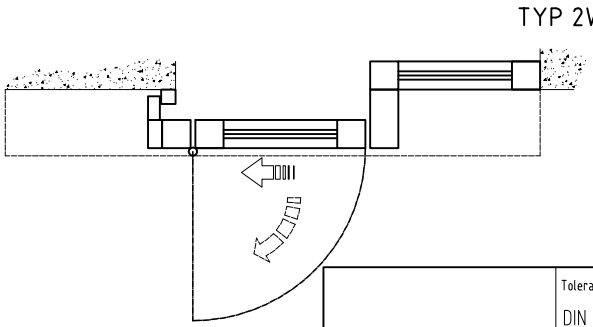

				Tolerance odprtih mer DIN 7168 srednji razred	Surface	Scale	Position / Quantity
						FIRE RESISTANCE E30 or EI30	
					Date / Name / Signature	AUTOM. SLIDING DOOR SL200EF	
				Drawn	22.4.2006 / M. PAK	FIRE-BREAKOUT - 1 SLIDING WING	
				Checked			
				Standard			
				doorson		SHEMATIC REVIEW	Version 01 / Page 01 / Pg
State	Changes	Date	Name	Filename			