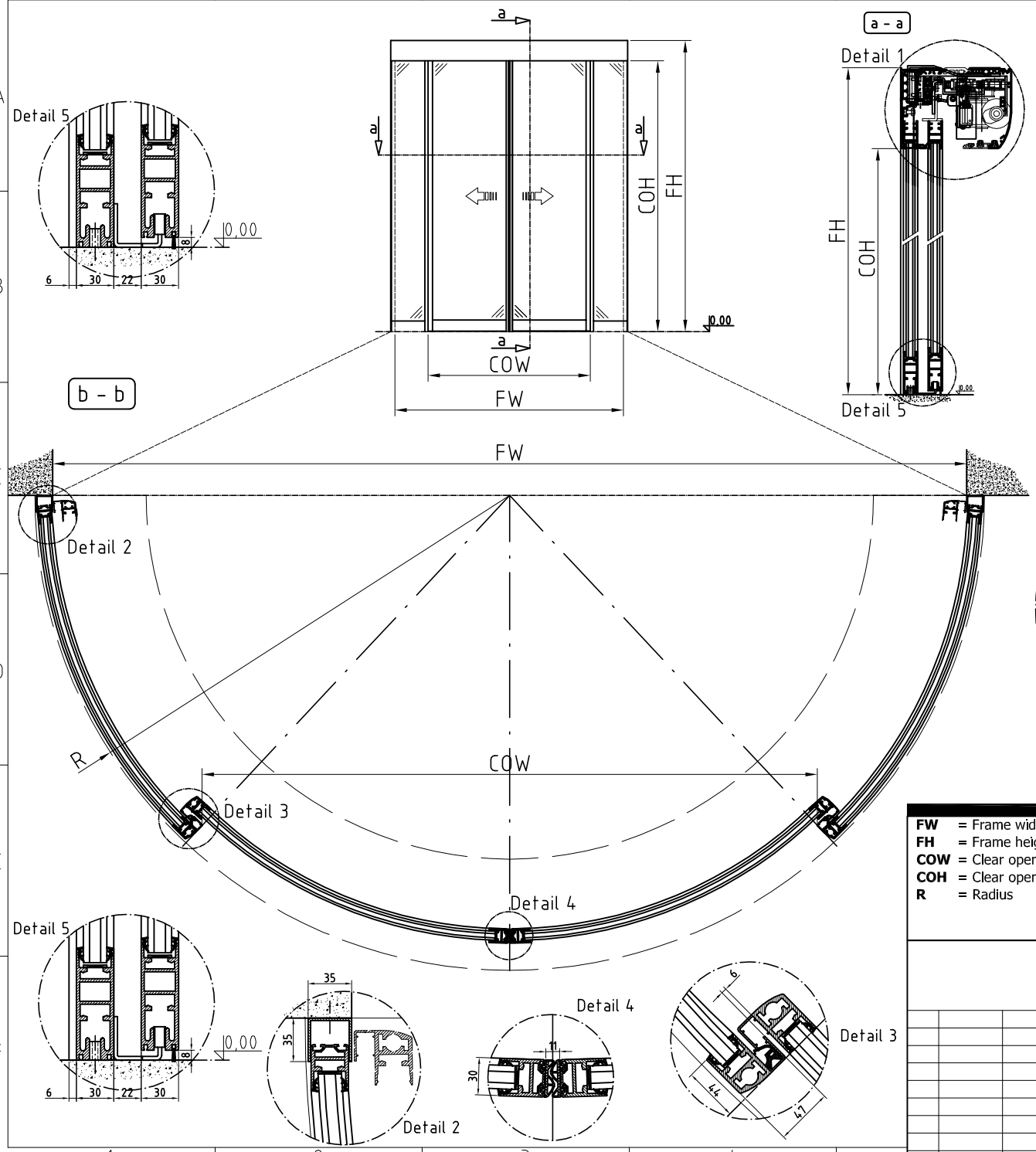

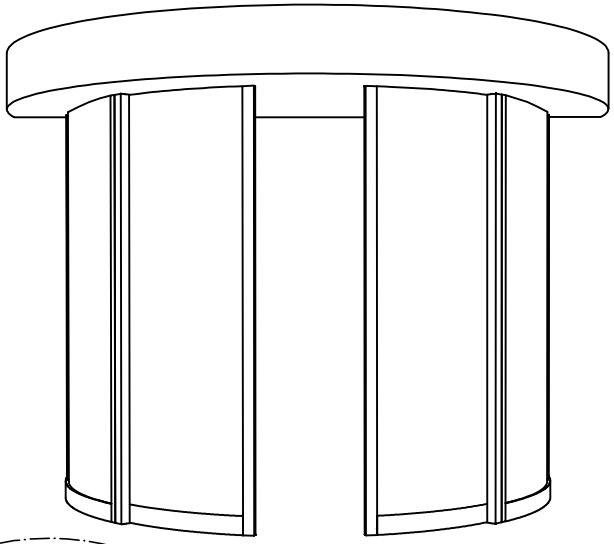

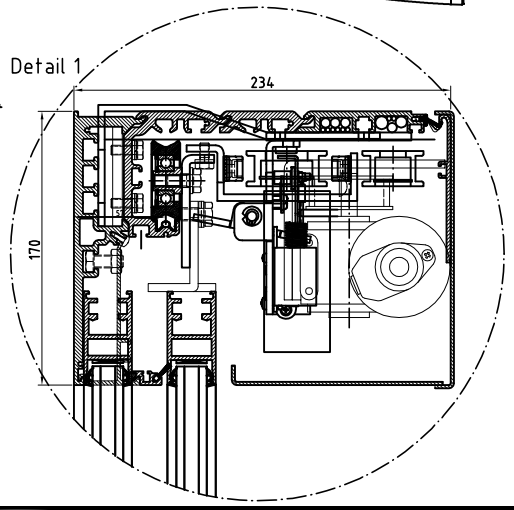

FW = Frame width	min. 2000 / max. 4000	**SURFACE TREATMENT :**	**GLASS :**
FH = Frame height	min. 1900 / max. 2500	• special anodized	• laminated 4+4
COW = Clear opening width		• E6AO anodized	• laminated 5+5
COH = Clear opening height		• RAL	• temperad 8
R = Radius	R_{min} = 1000		• temperad 10
			• izolativ 5-9d-5
			• izolativ 3+3-9d-3+3

				Tolerance odprtih mer	Surface	Scale	Position	Quantity	
				DIN 7168 srednji razred		**OCCAM**			
					Date	Name	Signature		
				Drawn	18.09.06	M. PAK		CURVED SLIDING DOOR SL200C	
				Checked				TERMO 4W/2S	
				Standard					
				doorson				Version 01	Page 01 Pg
State	Changes	Date	Name	Filename					